The Johns Hopkins University
Applied Physics Laboratory
Laurel, Maryland 20723

STEREO Propulsion SubSystem

Larry Mosher

STEREO Propulsion SubSystem

The Johns Hopkins University
Applied Physics Laboratory
Laurel, Maryland 20723

- **Requirements**
  - **Provide Forces and Torques for Tip-off Rate Negation and 3-axis Momentum Dumping**
  - **Presently No Requirement for Injection Correction, De-Spin or Orbit Adjust Forces or Torques**
  - **Provide Sufficient Expendables For A 5 Year Mission Including a 10% Leakage Allowance**
  - **Total External Leak Rate Š 1 x 10^{-5} scc/s**
  - **Minimum torque per pulse per axis Š 0.25 momentum storage capability per axis**

STEREO Propulsion SubSystem

The Johns Hopkins University
Applied Physics Laboratory
Laurel, Maryland 20723

- **SubSystem Schematic**

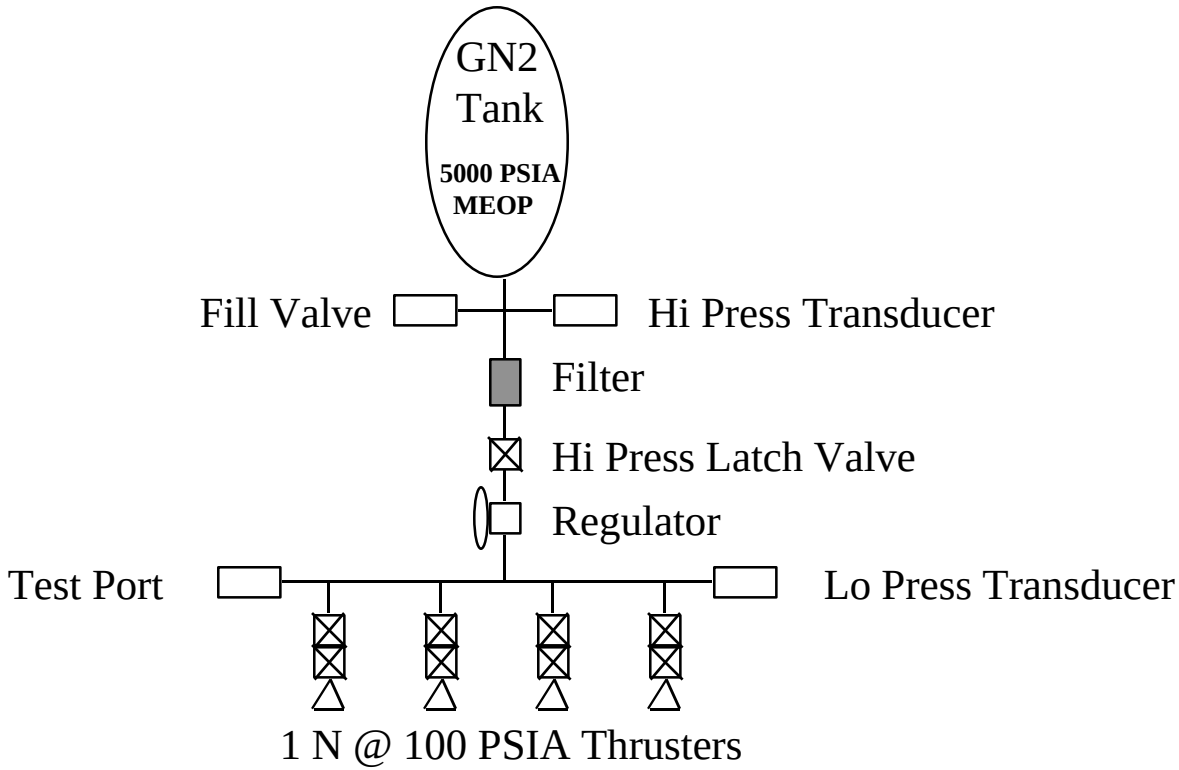

• SubSystem Sizing

INPUTS	METRIC	ENGLISH
Spacecraft Initial Mass - KG/LB	350.00	771.61
Injection Trim Delta V - m/sec - ft/sec	0.00	0.00
Separation Spin Rate - RPM	0.00	
X Approximate Stowed Spin Inertia - KG-M2	90.00	
Despin - N-m-sec - lb-ft-sec	0.00	0.00
Max Tip-off Rate - deg/sec	2.00	0.00
Y, Z Approximate Stowed Inertia KG-M2	180.00	
Tip-off Rate Nullification - N-m-sec - lb-ft-sec	6.28	4.63
S/C Projected Area - M2 - ft2	6.00	64.59
Solar Radiation Pressure -N/M2 - lb/ft2	4.617E-06	9.646E-08
Reflectance Factor	0.60	0.60
Off Normal Sun Angle - Deg	0.00	0.00
CP/CG Offset - cm - ft - in	10.00	0.328
Mission Duration - years	5.00	5.00
Mission Duration - sec	1.58E+08	1.58E+08
Thruster Moment Arm - M - ft - in	0.75	2.46
GN2 Isp - sec	65.00	
Thrust - N - Lb	1.00	0.225
Flow Rate - g/sec - lb/sec - KG/sec	1.569	0.00346
Leakage Allowance - %	10	10
Nominal GN2 Temperature - Deg F		70.0
Maximum GN2 Temperature - Deg F		104.0
Minimum GN2 Temperature - Deg F		-20.0
Initial Tank Pressure @ Nom. Temp. - psia		4698.6
Final Tank Pressure @ Min. Temp. - psia		100.0
MEOP @ Max. Temp. - psia		5000.0
Burst/MEOP Factor of Safety	2.0	2.0
Tank Figure of Merit (PV/W) - in		1250000

• SubSystem Sizing (cont)

GN2 TANK CALCULATIONS	METRIC	ENGLISH
Despin - N-sec/Lb-sec	0.0	0.0
Tip-off Nullification - N-sec/lb-sec	8.4	1.9
Solar Radiation Pressure Torque - N-M/lb-ft	4.43E-06	3.27E-06
Momentum Dump Impulse - N-sec - lb-sec	932.49	209.73
Leakage Allowance - N-sec - lb-sec	93.25	20.97
Injection Trim GN2 - KG/LB	0.000	0.000
Despin GN2 - KG/LB	0.000	0.000
Tip-off Nullification GN2 - KG/LB	0.013	0.029
Momentum Dump GN2 - KG/LB	1.463	3.227
Leakage Allowance GN2 - KG/LB	0.146	0.323
Required Mission GN2 Total - KG/LB	1.622	3.578
Required Tank Volume - L/in3	5.04	307.27
Spherical Tank ID - cm/in	21.27	8.37
Tank OD - cm/in	22.54	8.87
Tank OAL - cm/in	23.81	9.37
Ideal Tank Mass - KG/LB	1.12	2.46
Total Loaded GN2 Mass - KG/LB	1.663	3.666

TANK VOLUME AND GN2 MASS VS CG/CM OFF-SET (5 YEARS, 4.6x10-6 N/m2 SOLAR PRESS, 5000 PSIA MEOP)

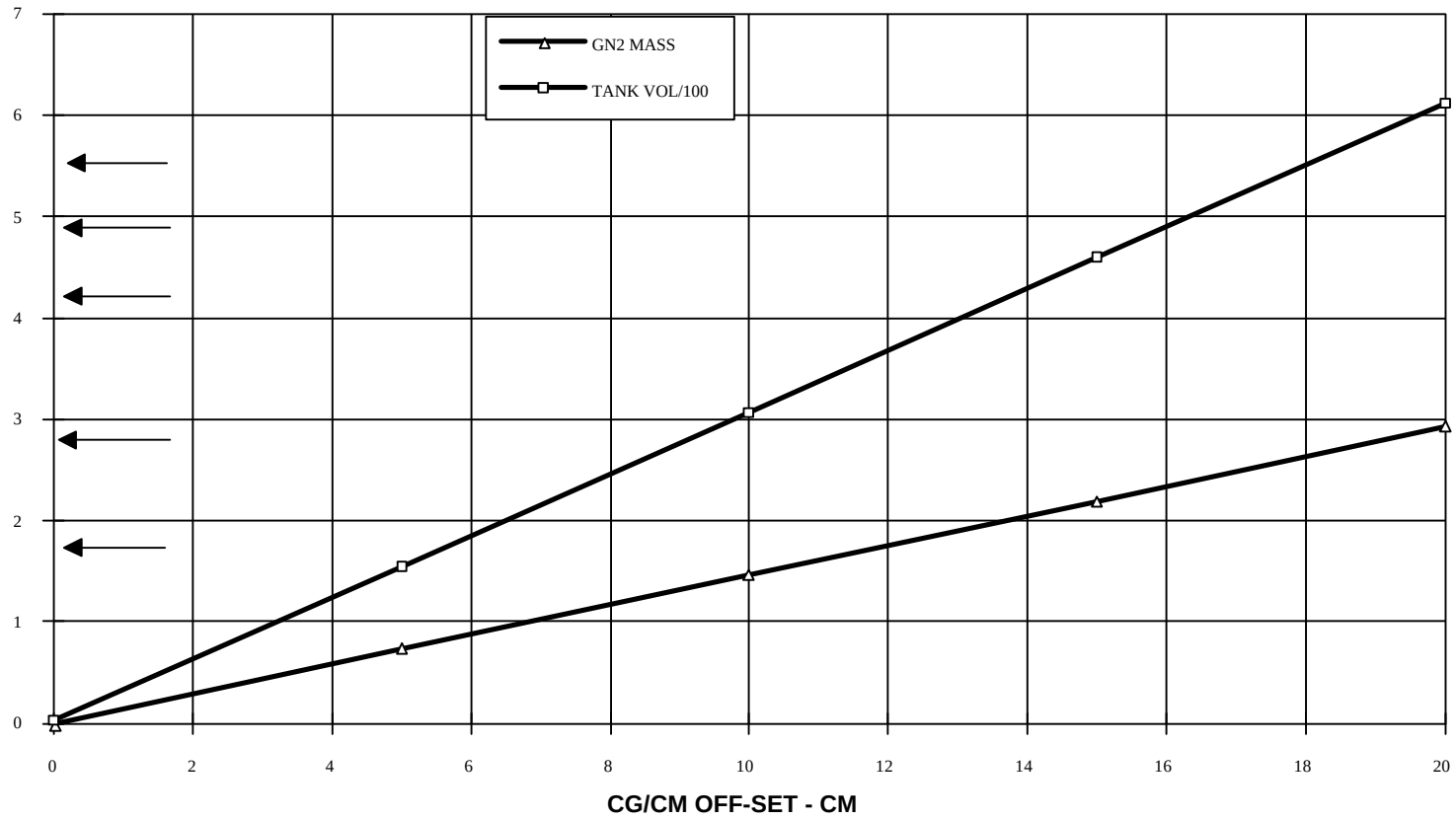

• SubSystem Mass and Heritage

COMPONENT	N	UNIT MASS - KG	TOTAL MASS - KG	HERITAGE
TANK	1	2.404	2.404	CLEMENTINE
FILL VALVE/TEST PORT	2	0.154	0.308	IABS
PRESSURE TRANSDUCER	2	0.184	0.368	TRIDENT, ACE, NEAR
HIGH PRESSURE FILTER	1	0.060	0.060	MX
LATCH VALVE	1	0.300	0.300	CLEMENTINE
REGULATOR	1	1.000	1.000	OSO
THRUSTERS	4	0.300	1.200	CLEMENTINE
MANIFOLD	AR	1.000	1.000	NEW
MOUNT STRUCTURE	AR	2.000	2.000	NEW
HARNESS/TEST CONNECTOR	AR	1.000	1.000	NEW
THERMAL	AR	0.050	0.050	THERMISTERS
TOTAL DRY			9.690	
TOTAL WET			11.353	

• Baseline Thruster Arrangement

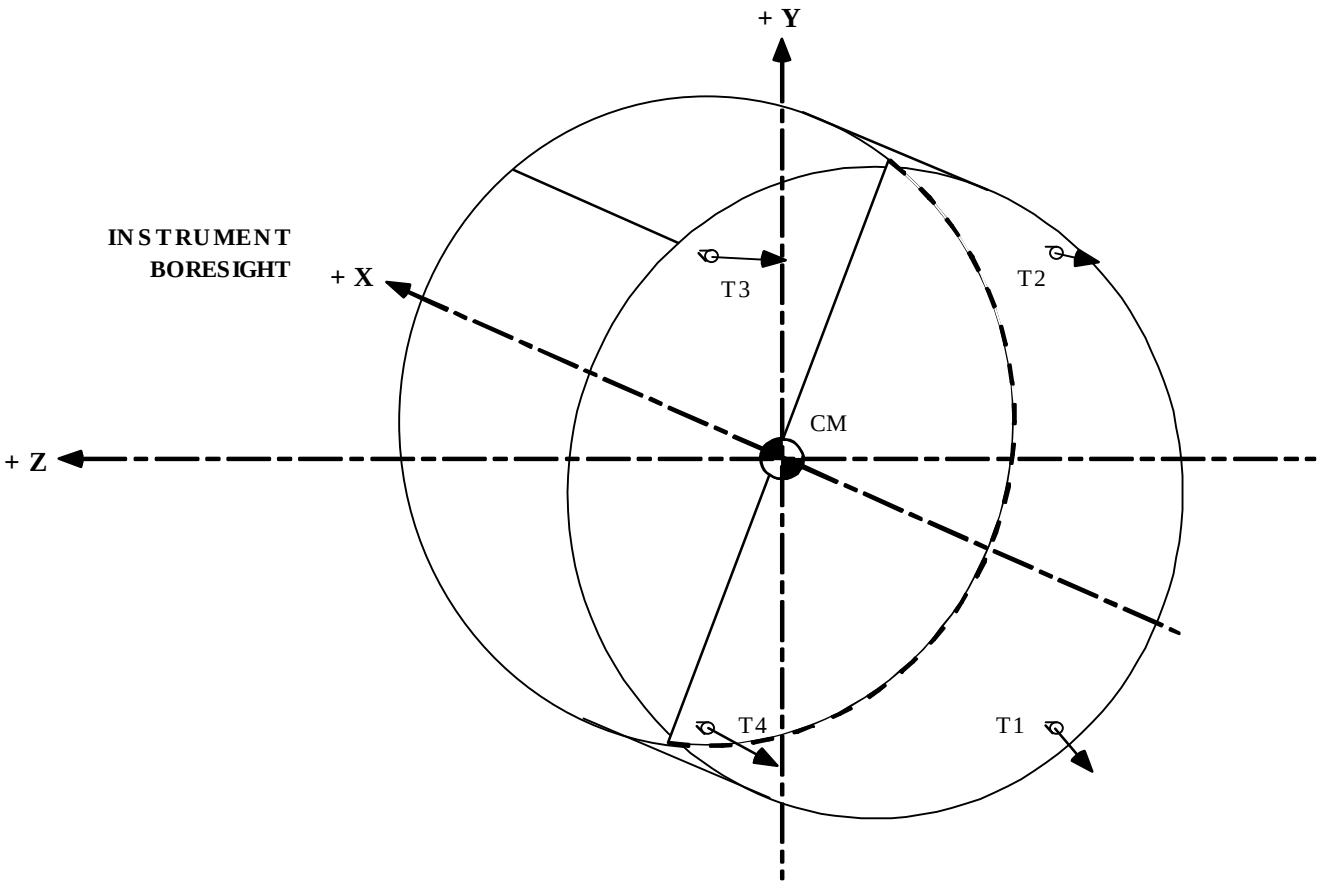

15 DEGREE DOUBLE CANTED
4 THRUSTER SET PROVIDES
PITCH, YAW, ROLL & 1 AXIS ² V

THRUSTER	TORQUE	AXIS
T2 T3	+P	AROUND Z
T1 T4	-P	AROUND Z
T1 T2	+Y	AROUND Y
T3 T4	-Y	AROUND Y
T2 T4	+R	AROUND X
T1 T3	-R	AROUND X
THRUSTER	FORCE	
T1 2 3 4	+X	

- REQUIRES THRUSTER MATCHING AND ALIGNMENT TO MINIMIZE CROSS COUPLING
- TORQUE CAPABILITY AROUND X AXIS IS DIMINISHED. OTHER AXIS HAVE TWO THRUSTER TORQUE

• Manufacturing, Integration and Test Flow

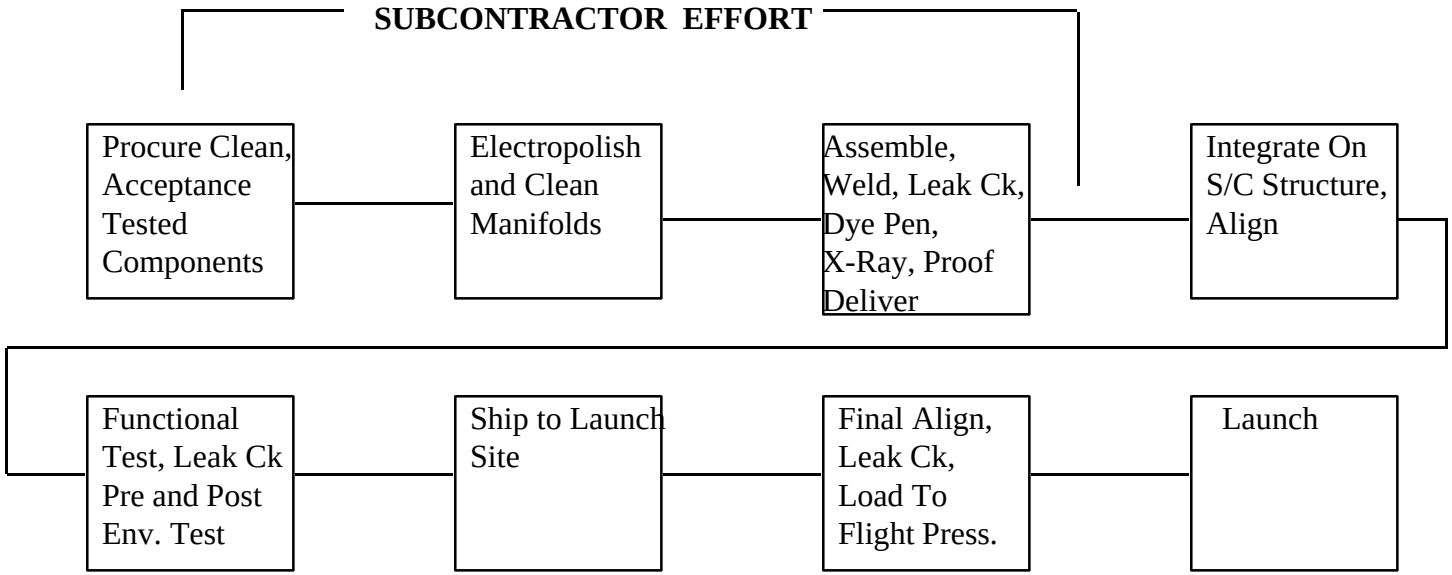

STEREO Propulsion SubSystem

The Johns Hopkins University
Applied Physics Laboratory
Laurel, Maryland 20723

- **Issues**
  - **Assembly and components must remain leak tight**
  - **Component leakage is minimized if cleanliness is maintained through out the manufacturing and test flow**
  - **Initial cleanliness is enhanced if all manifolds are internally electropolished**
  - **Cleanliness is maintained if filtered valve savers are used on all fill valves**
  - **Cleanliness is maintained if only certified dry research grade GN2 is used**
  - **Leakage protection is provided by the latch valve/regulator combination, thruster valve inlet <u>and</u> outlet filters and series redundant thruster valves**
  - **Lockup protection is provided by requiring all valves to operate at MEOP**
  - **SubSystem redundancy could be enhanced by first doubling the number of thrusters, then 2 staging the regulator, then paralleling the latch valve**

• Keys To Low Cost

- **Minimum number of components**
- **Flight qualified, off-the-shelf design components**
- **Build clean, keep clean to minimize late leaks**
- **Factor of safety • 4.0 during all testing to minimize safety documention**
- **Buried, protected COPV installation to minimize range safety documentation**
- **RFP's to at least 3 qualified vendors to assure competitive bids**